Reliable Power Expert

A Global Leading Lithium Ion
Battery Energy Storage Solutions Provider

RPES-51.2V314-W2

Product Picture



Introduction

- Higher safe LiFePO4 Battery with top brand
- Higher energy density
- Built-in smart BMS for multiple protection
- Reliable & stable pack design
- 10 years warranty
- IP20,indoor installation

Applications

System Diagram

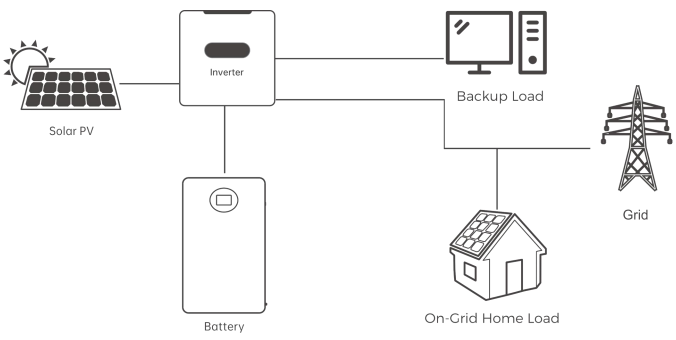

Performance

Battery type-Chemistry	LiFePO4
Nominal Voltage	51.2V
Nominal Capacity	314Ah
Total Energy	16.08kkWh
Voltage Range	43.2V-58.4V
Recommended Charging Voltage	57.6V
Max. Charging Voltage	58.4V
Recommended Charging Current	100A
Max. Continuous Current	200A
Recommended Discharge Voltage	44.8V
Max. Discharging Voltage	43.2V
Max. Continuous Discharge Current	200A
Peak Discharge Current	250A@100ms
Discharge Temperature	- 20 ~ 55°C
Charging Temperature	-15 ~ 55°C
Storage Temperature	- 20 ~ 45°C
Terminal Type	Screw Terminal （1+，1-）
Case Material	SPCC-white
BMS Build-In	Yes
Efficiency	>98%
Self Discharge per Month	<3%
Max. in Parallel	16PCS
Heating Function	Available
Bluetooth(App)	Available
Fire Extinguisher	Available
Weight（Approx.）	115KGS
Dimensions (LxWxH)	825*415*235mm
Cycle life(0.2C, 25°C@80% DOD)	8000 Cycles
Design Life	>10 years
Certifications	CE/ROHS/UN38.3
Communication Port	RS485, RS232, CAN, Dryport,